S2014, BME 101L: Applied Circuits Lab 2: electret microphones

Kevin Karplus

April 2, 2014

1 Design Goal

For this lab, you will

- characterize the DC behavior of an electret microphone, using a microprocessor to automate the measurement,
- design a simple circuit to bias the microphone appropriately to have an output that is centered at 1v,
- observe the waveform of the microphone on the oscilloscope, and
- design a very simple high-pass (DC-blocking) filter to convert the microphone output from being centered at 1v to being centered at 0v, using just resistors and capacitors.

Much of this lab is familiarization with the oscilloscope (DC and AC coupling, input scaling, X1/X10 probes, time base, triggering, ...) and with the PteroDAQ data acquisition system.

2 Background

2.1 Electret microphone

An electret microphone consists of a permanently charged capacitor (an "electret") connected to the gate of a field-effect transistor. One plate of the capacitor is a diaphragm, moved by the changes in air pressure that make up sound.

Because the charge on the electret is constant, but the capacitance changes with the separation between plates of the capacitor, the voltage across the capacitor changes with the separation:

$$V(t) = Q/C(t) \ .$$

The small change in voltage is converted to a change in the saturation current of the field-effect transistor (FET), which can be measured externally. We will look at field-effect transistors more carefully in a later lab: for this lab we are mainly interested in looking at the electret microphone as a simple sensor, but some of the FET behavior will appear in the DC characterization of the microphone.

Read `http://en.wikipedia.org/wiki/Electret`
and `http://en.wikipedia.org/wiki/Electret_microphone`

2.2 Analog-to-digital conversion with PteroDAQ

There are some limitations of the KL25Z analog-to-digital converter that are important for this lab:

- The microprocessor can only record voltages (as well as digital values and timestamps), so we need to convert other signals (like current) into a voltage that we can measure.
- The highest voltage allowed on any pin is 3.3v and the lowest is 0v.

- There are only 16 channels that can be used for single-ended voltage input (and only 2 that can be used for differential input).

- The resolution is only 16 bits (65536 steps). With V_{REFH} at the default value of 3.3v, the step size is about 50μv for single-ended measurements and 101μv for differential measurements. Note: the accuracy is much worse than the resolution, but is difficult to estimate ahead of time—repeatability is probably only ±1mv, and the absolute accuracy probably only ±3%.

- The external reference voltage V_{REFH} must be at least 1.13v and no more than the 3.3v power supply to the microprocessor chip, if you use an external reference (not needed for this lab).

- Readings are not simultaneous, but the analog-to-digital converter is quickly switched from one input to another. It takes between 2.2μs and 128μs for each conversion, and the PteroDAQ default settings generally use the slower conversions to get higher accuracy. For slowly changing signals, this skewing of the inputs in time doesn't matter much, but for fast-changing signals it can make a big difference.

- The KL25Z has limited memory size for queuing recordings and will drop data points if its queue is full. Each sample requires 4 bytes for a time stamp and 2 bytes per analog channel, so the 16kB of RAM on the board can only hold about 2700 samples of a single channel or 2000 samples of 2 channels. That means it can hold about 2 seconds worth of data at a 1kHz sampling frequency (sampling once per msec) or 1 second at 2kHz.

  The PteroDAQ software transfers the data as quickly as it can to the host computer, which generally means that you can record indefinitely at 1kHz sampling and for a couple of seconds at 2kHz (depending on the speed of the Python program on the computer and the USB serial communication). The old Windows 7 machines in the lab run the host software very slow, so there can be substantial lag in displaying the results for sampling rates above 80Hz—the display may continue running for quite a while after you pause recording, as the computer catches up with queued data. More modern computers have no trouble keeping up with 1kHz sampling.

2.3 Oscilloscope

An oscilloscope is a device for visualizing a time-varying voltage. There are two main types: analog and digital. Read `http://en.wikipedia.org/wiki/Oscilloscope`

The analog oscilloscopes use a cathode-ray tube, which shoots an electron beam at a phosphor-coated screen to make a bright dot. The electron beam is deflected horizontally by a sawtooth waveform, so that the spot moves repeatedly across the screen from left to right at a constant speed. The beam is deflected vertically by the input voltage, so that what appears on the screen is the voltage as a function of time.

The digital oscilloscopes record the input voltage for a chunk of time, then display it on a screen. The recorded data can be manipulated in various ways that are not feasible with the analog scope, and the data can be saved on a computer for further analysis. It is now possible to get devices that serve as the front-end of a digital oscilloscope, using a laptop or tablet computer for the display. These are currently less sophisticated than dedicated oscilloscopes, but considerably cheaper for similar levels of capability.

Traditionally, oscilloscopes have a display that is 10 "divisions" wide and 8 "divisions" high. The oscilloscopes have controls for setting the scaling of the inputs and of the time base, in terms of how many volts or seconds there are per division. The inputs usually also have a choice of DC-coupled or AC-coupled input. Read `http://en.wikipedia.org/wiki/Direct_coupling` and `http://en.wikipedia.org/wiki/Capacitive_coupling`

Both analog and digital scopes have "trigger" conditions, which determine when a sweep across the scope display starts. These trigger conditions can be based on any of the inputs to the scope (there is often

an additional input to the scope available purely for triggering). On analog scopes, the trigger is usually a voltage level and whether the input signal is rising or falling as it crosses that voltage level. Digital scopes may have the ability to do more complicated triggering logic. Because digital scopes have memory, they can allow you to see what happened before the trigger, as well as afterward.

The triggers can be done once (single triggering), producing one sweep across the screen. On digital scopes, this gives you a record of a one-time event that can be carefully analyzed, but on an analog scope, the fluorescence quickly fades, unless the trace is captured photographically. The triggers can also be done in "normal" mode, where each occurrence of the trigger starts a new trace. If you have a repetitive input signal, this allows the analog display to show the same portion of the signal repeatedly, giving a stable image (like looking at a rotating object with a stroboscope). Finally, there is usually an "auto" mode that starts a new trace without waiting for a trigger signal, which allows you to see the input without having to set proper trigger conditions. Generally, you use the "auto" mode initially to look at the signal and choose appropriate trigger conditions.

For more information about triggering look at
`http://hobbyprojects.com/oscilloscope_tutorial/oscilloscope_trigger_controls.html`

3 Pre-lab assignment

- Read about electret microphones, as cited above.

- Read the data sheet for the CMA-4544PF-W electret microphone we'll be using for this lab. Note: you'll have to find the data sheet yourself—either by using Google or using the website of a supplier like DigiKey. It is a good idea to download the PDF files of parts that you have in your parts kit, so that you have them quickly available even when you don't have Internet access.

- Read about oscilloscopes in general, as cited above.

- Read about the controls for the oscilloscopes in the lab:

  Kikusui COS5041 analog scope `http://www.kikusui.co.jp/kiku_manuals/C/COS5040_5041_E.PDF`

  Tektronix TDS3052 2-channel digital storage scope. Somewhat surprisingly, Tektronix hides their user manual behind a login requirement, making it relatively inaccessible to students or purchasers of used equipment. Given how extremely confusing their control panels are without a manual, this is extremely short-sighted of them—if students have bad experiences learning to use their equipment, who will specify the equipment later? I found a copy at `http://www.cs.washington.edu/education/courses/cse466/07wi/labs/l2/Oscope/TDS3000Manual.pdf`

  The analog scopes are easier to learn to use and will be sufficient for this lab, though the digital scopes offer considerably more capability if you can figure out the controls. Despite the inventory claims on the BELS web pages, there appear to be more digital scopes than analog scopes in the lab, so you'll probably have to learn to use them at least minimally—you can't be sure that the simpler analog scopes will be available.

- Read how to use the function generators in the lab: Agilent 33120A. You won't need most of the capability of those function generators (which are really overkill for a beginning circuits course), just how to generate a sine wave of known frequency, which is covered in pages 19–21 of the User's Guide: `http://www.home.agilent.com/upload/cmc_upload/All/6C0633120A_USERSGUIDE_ENGLISH.pdf`

- Prepare gnuplot scripts for plotting current versus voltage and equivalent resistance versus voltage, including fitting different models. You'll probably have to tweak these scripts once you get real data, but you'll want to have a usable basis to start from, rather than spending lab time reading gnuplot documentation. It can be very valuable to display data immediately after collecting it, so that you can plan the next stage of data collection: do you need more points at the low end? at the high end? Are there regions that need to be filled in? Are there anomalous points that need to be remeasured?

4 Parts, tools, and equipment needed

Parts for this lab from kit:

- KL25Z board
- USB cable for board.
- CUI inc CMA-4544PF-W electret microphone
- 10kΩ trimpot
- resistors
- capacitors
- breadboard
- loudspeaker

Tools for this lab:

- wire cutters
- wire strippers
- small screwdriver for trimpot

Equipment in lab:

- power supply (for providing power to microphone)
- multimeter (for measuring current and voltage)
- oscilloscope (for observing signal)
- function generator (for producing a sound signal for mic)

5 Procedures: DC characterization

5.1 DC characterization with multimeter

The first part of the lab is to measure the DC current through the microphone for various DC voltages across it. Using just the bench equipment in the lab, this is most easily done by hooking up a multimeter configured as an ammeter in series with the mic, and powering the pair from the bench power supply. Connecting clip leads to the mic can be difficult, but the mic plugs into the breadboard easily, allowing wires or double-ended header pins to be used as probe points. Be sure to get the polarity right, as shown in Figure 1.

Figure 1: Back of the electret microphone. In this orientation, the lower terminal is "Terminal 2", which should be connected to ground, and the upper terminal is "Terminal 1", which should be connected via a series resistor to the positive voltage source (or terminal 1 to the positive power rail and terminal 2 via a series resistor to ground—either way, terminal 1 should be the more positive voltage).

Before enabling the output of the power supply, make sure that you have set the current limit of the appropriate half of the power supply to somewhat less than the maximum allowable current for the microphone (find the limit on the data sheet!). This not only protects the microphone, but prevents blowing fuses in the multimeter if you accidentally wire things up wrong.

Measure the current at several different voltages (say 1–10 volts in steps of 1 volt). Note that the data sheet specifies a maximum voltage for the microphone. Don't exceed it.

Record the voltages and currents in a table on your computer and try to fit the I-vs-V curve with various functions using gnuplot. If your measurements are all for voltages over 1v, you should see fairly constant current.

5.2 DC characterization with PteroDAQ

Measuring with the multimeter and recording the data by hand in a lab notebook or by typing it into a file is tedious, and so relatively few data points will be taken. This makes it easy to miss important phenomena, so let's automate the measurement. The goal is to use the Data Logger from C:\ProgramFiles\PteroDAQ\ or http://bitbucket.org/abe_k/PteroDAQ/downloads to record numbers from which you can derive either an I-vs-V curve or an R-vs-V curve (where the resistance here is the DC resistance $R = V/I$ not the dynamic resistance $\frac{dV}{dI}$).

The circuit in Figure 2 provides one way to convert currents through the microphone into voltages that we can measure. The KL25Z board provides a 3.3v power supply and ground connection to power the circuit, the 18-turn trimmer potentiometer (trimpot) allows us to present a lower voltage to the microphone plus the series resistor that acts as a voltage divider. We can use the differential inputs E20_MINUS_E21 to measure the voltage across the microphone and E22_MINUS_E23 to measure the voltage across the resistor R2, which can be converted to the current through the resistor (and hence through the microphone) using Ohm's Law.

The value of R2 is a design parameter. If it is small, then there will be little voltage drop across it for a given current, and we can have most of the voltage drop across the microphone. This will allow us to test the microphone at fairly large voltages, but the small voltage drop will mean that we have low resolution on the current measurement. A large resistance for R2 means that we can measure low currents more accurately, but the highest voltage that we can put across the microphone will be limited.

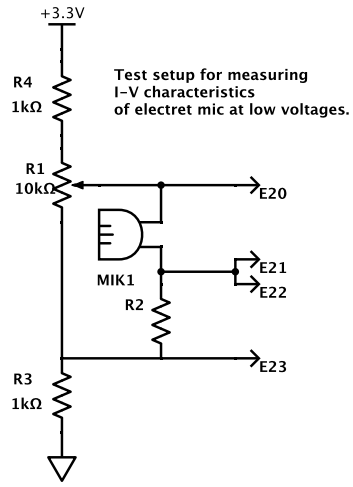

Figure 2: Schematic for testing the the DC characteristics of the microphone. The voltage source is the KL25Z board. The resistors R3 and R4 ensure that the voltages do not get too close to the power rails, where the differential ADC readings get inaccurate. Schematic drawn using `http://www.digikey.com/schemeit`

Design goal: using the data you collected with the multimeter, choose a value for R2 that will limit the voltage drop across it to about 0.2v at the largest current you would expect through the microphone.

Collect data at frequent time points (at 30Hz, for example) as you adjust the trimpot slowly from one end to the other. You should gather several hundred, or even a few thousand, data points—the order of the data points doesn't matter as we won't be using the timestamps. You can sweep back and forth until you've collected enough data.

Record metadata in the "notes" field that includes who collected the data, what the values of all the components were, and how to interpret the readings (voltage across microphone, voltage across series resistor of __kΩ, ...).

Write a gnuplot script to plot the data as I-vs-V points and as R-vs-V points. Plot the multimeter-measured data on the same plot Plotting with log scales on both axes makes the data look simpler and easier to come up with models for. Using a linear scale for voltage may hide the low-voltage behavior.

If your results look like mine, you'll probably find that there are few data points below 0.05v. Collect another data set with a larger resistor for R2, to measure the smaller currents for microphone voltages up to 0.1v. What size would be appropriate for that? Note that if R2 is large, then the maximum voltage you can get from the potentiometer is a little less than $3.3v10k\Omega/(1k\Omega + 10k\Omega + 1k\Omega) = 2.75v$, so you'd want a voltage drop of about 2.6v across R2 at the current you'd get with 0.1v across the microphone.

Optional design challenge: if you finish measuring the voltage and current for the microphone up to 3v and up to 0.15v, try to devise a circuit that allows your to *safely* measure up to 10v across the microphone. Note that no voltage applied to the KL25Z pins should go outside the range 0v to 3.3v. [Hints: 1) You may find it easier to use single-ended measurements rather than differential ones, and do any necessary subtraction when you analyze the data. 2) Almost everything we do in this course involves voltage dividers.] *Check your circuit with a multimeter before hooking up the KL25Z, to make sure that you won't accidentally deliver a large voltage to the board!*

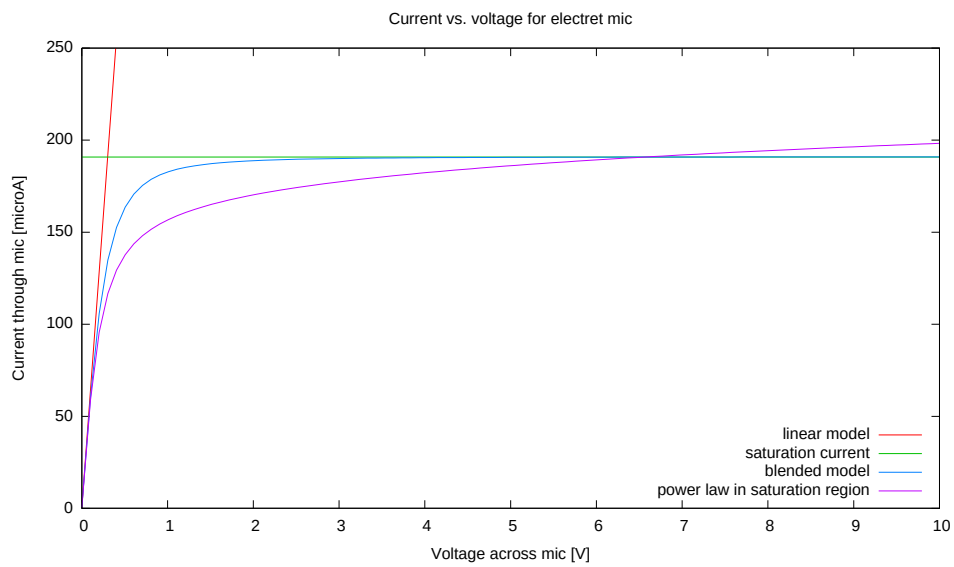

Figure 3: Current-versus-voltage plot for the electret mic. The linear scale for current and voltage makes the high-voltage behavior clear, but the low-voltage behavior is obscured. For this figure, I've deliberately suppressed the data and the parameters I got, to give the flavor of the models. Your plots should, of course, include the data and you should use "sprintf" in the titles of the plotted curves to print the parameters of the models.

6 Analysis

On Wednesday, we will try fitting models to the data in class. Here are four models to try fitting:

- linear (resistance) model: $I = V/R_L$. You may want to fit R_L for just the lower voltages across the microphone.

- saturation (current source) model: $I = I_{sat}$. You may want to fit the saturation current I_{sat} for just the higher voltages across the microphone—perhaps using mainly the multimeter-measured data, which is not limited to as low a voltage.

- blended linear and saturation model: $R(V) = \sqrt{R_L^2 + (V/I_{sat})^2}$ or $I(V) = V/\sqrt{R_L^2 + (V/I_{sat})^2}$. This makes a smooth transition from the linear model to the saturation model, with the $\lim_{V\to 0} R(V) = R_L$ and $\lim_{V\to\infty} R(V) = I_{sat}/V$. This model is similar to a standard model for FET behavior.

- power-law model. The saturation current, as I measured it, was not constant, but increased slightly as voltage increased. I modeled this with a power law: $R(V) = \sqrt{R_L^2 + (V^p/I_{sat})^2}$ or $I(V) = V/\sqrt{R_L^2 + (V^p/I_{sat})^2}$. If $p = 1$, this is the same as the previous model, but with $p < 1$, the current goes up with voltage even in the saturation region.

The current-versus-voltage plots for the four models are shown in Figures 3 and 4.

When I tried this lab (using an older version of the software on Arduino microprocessors), I got a very good fit with the last model, except at very low voltages and currents, where the quantization errors of the Arduino made measurement unreliable.

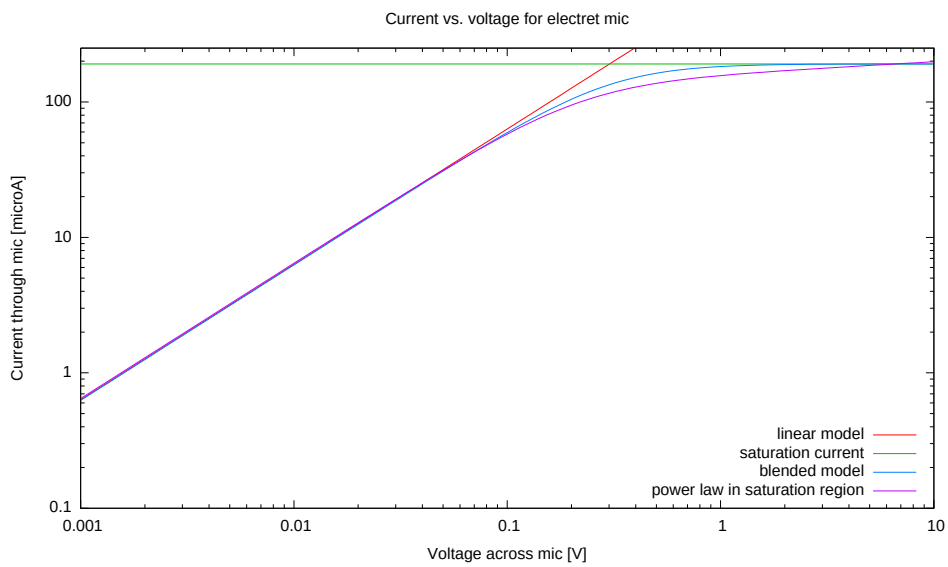

Figure 4: Current-versus-voltage plot for the electret mic. The log scale for current makes the low-voltage behavior clearer.

7 Procedures: Microphone to oscilloscope

You will be converting the current output of the electret microphone to a voltage output by putting the mic in series with a load resistor connected to a +3.3 v power supply (like a voltage divider, but with the microphone between the output and ground). Using your measurements or the formula you found for the I-vs-V curve, compute what resistance this load resistor has to be to get a 1v output voltage. Choose the closest standard resistance value from your collection of resistors, and measure the DC voltage you actually get. (Note: you can use either the bench power supply or the 3.3v power supply on your KL25Z board.)

Now hook up the oscilloscope probe to the output of the microphone and try to view the output of the microphone as a time-varying signal. Try using both AC coupling and DC coupling for the scope input, and see what happens if you change the triggering conditions.

You can whistle or talk into the mic or provide some other sound source. It may be easiest to learn to use the scope if you have a known input signal. One way to get that is to hook up the function generator to a loudspeaker to put out a sine wave of known frequency, say between 50Hz and 5kHz.

What is the amplitude of the AC output of the microphone? The AC amplitude is half the peak-to-peak voltage—that is, it is the maximum voltage minus the minimum voltage, divided by 2. Note that this amplitude will depend on how loud your sound input is.

Add a DC-blocking capacitor to the microphone as shown in Figure 5 and connect scope probes to both the AC-coupled and the DC-coupled outputs.

To choose a suitable initial DC-blocking capacitor value for testing, try to block frequencies below about 50 Hz (much higher than one would normally want to use). Use the pull-up resistor you chose as the resistance and the RC time constant $RC = \frac{1}{2\pi f}$ for a cutoff frequency f to compute the capacitance. If that works, try a capacitor about 50 times larger, to get a 1Hz cutoff.

We'll look at RC filtering in more detail later in the quarter.

Use the oscilloscope to compare the output of the microphone at the two points at different frequencies of input. Use the multimeter(s) to measure the RMS AC voltage at the two points for different frequencies (say 5Hz, 10Hz, 20Hz, 50Hz, 100Hz, ... , 50kHz). Plot the ratio $RMS(V_{AC-coupled})/RMS(V_{DC-coupled})$

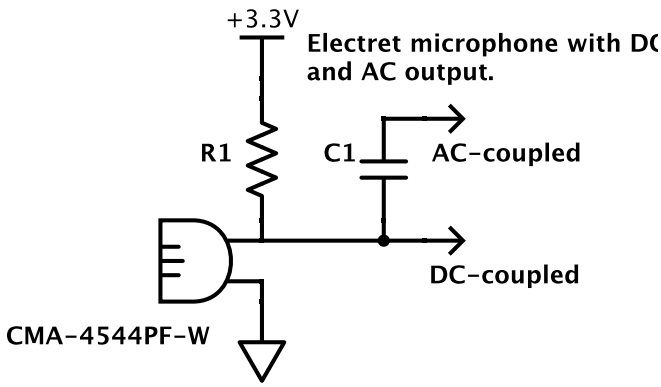

Figure 5: Schematic for the microphone, the load resistor, and the DC-blocking capacitor. You will need to fill in the values used. Schematic drawn using `http://www.digikey.com/schemeit`

as a function of frequency. Don't move your speaker or microphone around during these tests, as you don't want to change the relationship between the two. Your hands and body can act as important reflectors of sound also, so keep them well away from the mic and speaker during this test.

Note: the effect should be different depending on what size capacitor you use, particularly at the lower frequencies. Try a few different sizes, from 470μF down to 100pF. Note that the larger capacitors are "polarized"—one side must be more positive than the other. If you use one of them, which way should it be oriented?

8 Demo and writeup

Demo the oscilloscope outputs to the instructor, showing that you know how to adjust the time base, the input scaling, and the triggering.

On Friday turn in a writeup describing what you did. Remember that the instructor is *not* your audience—a bioengineer who has not read the assignment is.

Provide at least

- a purpose of the report (the problem you are solving or the design information you are providing);
- the I-vs-V or R-vs-V curves for the electret microphone (which electret microphone?), including your data and your models;
- a *correct* schematic of the testing circuit, complete with component values;
- a *correct* schematic of the circuit used to connect to the oscilloscope, complete with component values (if electrolytic capacitors are used, show the correct orientation in the schematic);
- a plot of the ratio of the RMS voltage after the DC-blocking capacitor to the RMS voltage before the DC-blocking capacitor as a function of frequency.